XST6333BFADA.75
LH SEAT SHOWN
SUBMITTAL DATA
PREPACKAGED MODEL 63337

STANDARD FEATURES

This photo does not reflect this "prepackaged model" accessory configuration.

OD: 63" x 34" x 78 3/4"
ID: 60" x 33"

Weight: TBD
Material: Gel-coat

- 4" classic tile with diamond accent
- 3/4" change of level threshold (1/4" finished flooring required)
- Walls constructed with 1/2" tri-cell honeycomb
- 2 molded corner soap dishes
- 1 large molded soap ledge at seat level
- Textured floor

Please make accessory selections on back
Technical data on back

Note:
Due to the nature of materials, dimensions may vary +/- 1/2"
This unit can not accept a shower door

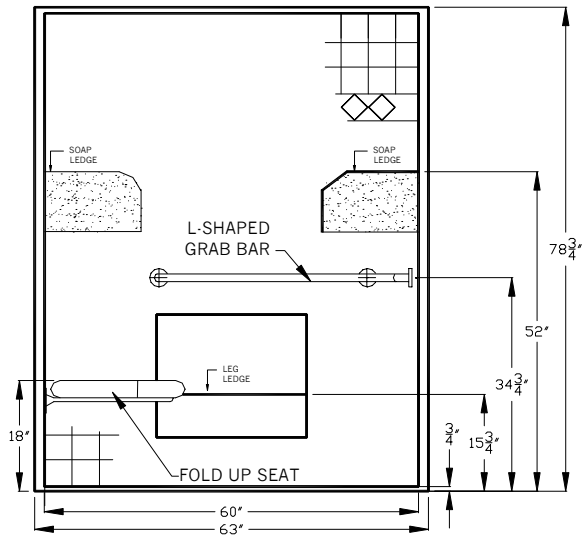

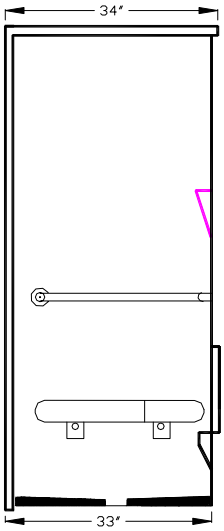

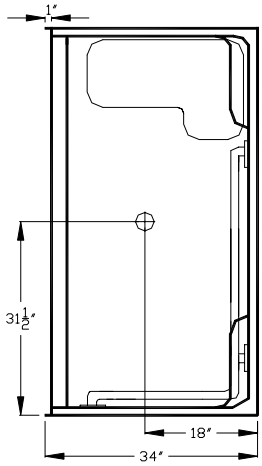

Cross Section of Threshold

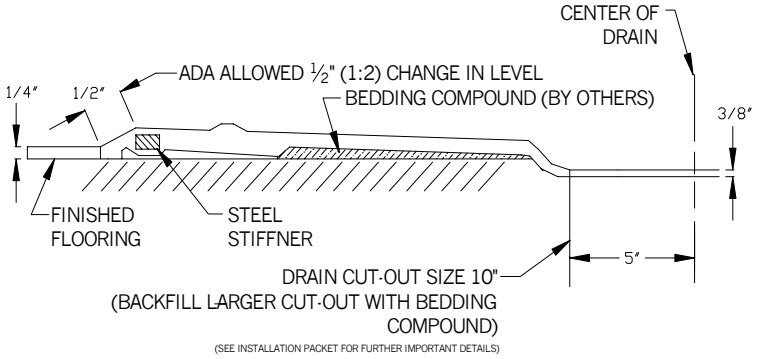

Note: This threshold drawing is not to scale

Water Retainage Options

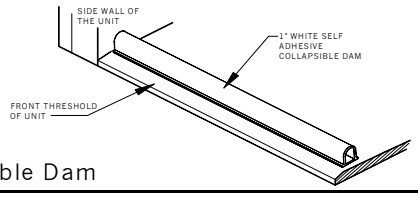

Collapsible Dam

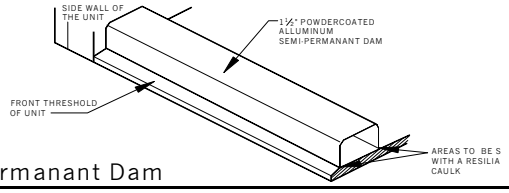

Semi-permanant Dam

COMFORT DESIGNS
10700 SPRING RUN RD * CHESTERFIELD, VA 23832
Phone: 800-801-2820 Fax: 804-790-1364 E-mail: comfortdesigns@comcast.net

Drawing: XST63337
Orig.: 3-17-03
Revised: 11-12-03

ACCESSORY OPTIONS

Grab bar:
❑1 1/4" OD Comfort Care white
❑1 1/4" OD Comfort Care Bone
❑1 1/4" OD Stainless Steel
❑Other: _____

Seat:
❑Frameless Padded Naugahyde
❑Frameless Phenolic wood slat
❑Frameless HDP (High density plastic)
❑Seat with Powder coated frame
❑Other: _____

Gel-coat color options:
❑White
❑Bone
❑Biscuit/Linen
Other: _____

Water Retainment Accessory Options Shipped loose:
❑White self adhesive collapsible dam
❑1 1/2" white semi-permanent dam
❑No caulk shower drain

Finish Options:
❑Max-guard anti-bacterial protection
❑Century Stone Color _____
❑"Blue Coated" protective coating spray

Comments: _____

COORDINATION

Installation Requirements

"No Recess Necessary" units are designed to be installed directly on the sub-floor surface. A 10" core drill or molded voids in slab or sub-floor surface 1/2" deep are required to accept a natural drain slope of unit. A non-shrinking thin set bedding slurry is required for standard installation. See Installation Instruction packet for further details.

❑**OPTION** The "Level Ready Base". This option eliminates the need for labor materials (slurry mix) and extra time that's usually required during the normal mud set installation. **THE FLOOR OF THIS SHOWER UNIT IS SELF-SUSTAINING. ONCE SET IN PLACE, THE SHOWER WITH THIS OPTION MAY ONLY NEED TO BE SHIMMED.** Refer to the installation instructions for further details.

Framing Pocket

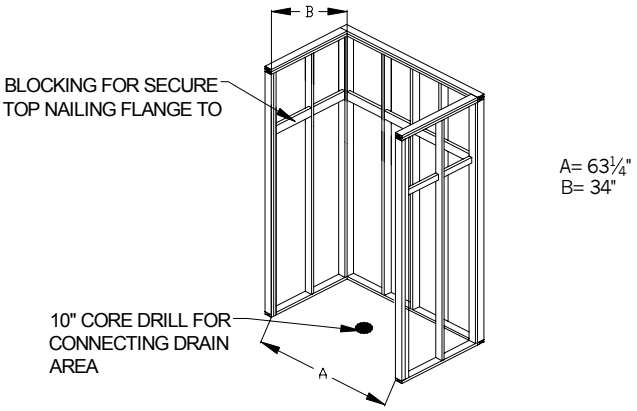

OTHER IMPORTANT INFO

Warranty: 3 years when installed in accordance with manufacturers installation instructions.

Code Reference Listing

This model shall meet or exceed the following code listings when fully accessorized and installed according to each codes requirements.

ICC/ANSI117.1 ANSI124.2 ADAAG BOCA NAHBUPC Southern Building Code

JOB INFO

Job Name: _____
Date: _____
Approved by: _____ (Print) _____ (Signature)

Quantity: [ ] RH [ ] LH (According to seat wall) Drawing # XST63337 Revised: 11-12-03
Wholesaler: _____
Architect: _____

Note: By signing this factory submittal sign-off drawing you are agreeing that the unit will be built according to your above selections. PO will reflect drawing.

COMFORT DESIGNS
10700 SPRING RUN RD * CHESTERFIELD, VA 23832
Phone: 800-801-2820 Fax: 804-790-1364 E-mail: comfortdesigns@comcast.net